LEGO SYSTEM

1252

4129333

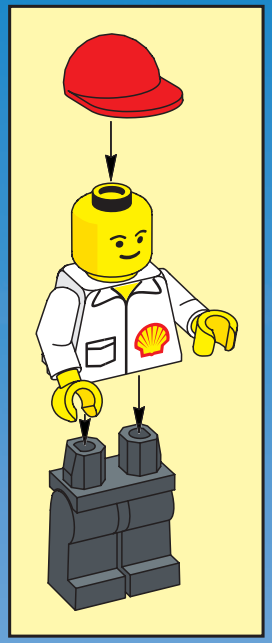

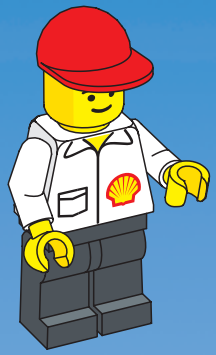

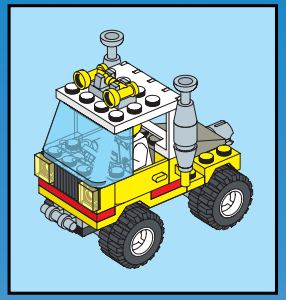

1

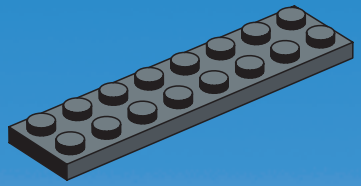

2

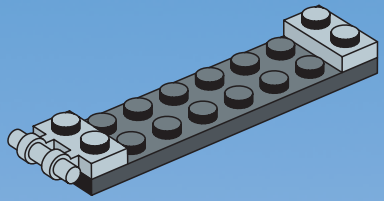

3

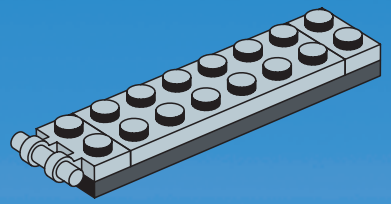

4

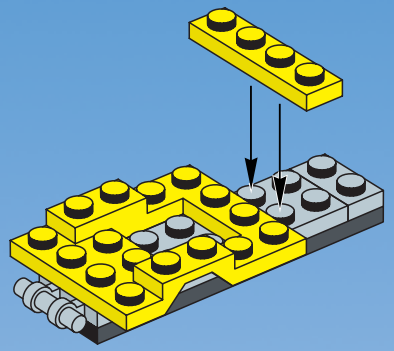

5

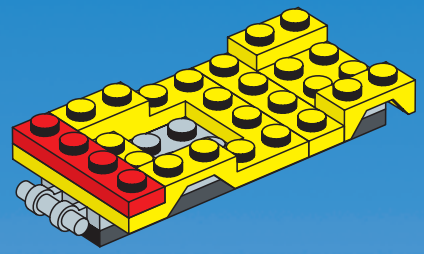

6

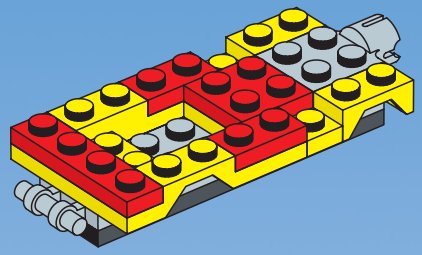

7

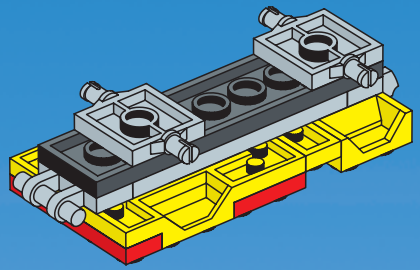

8

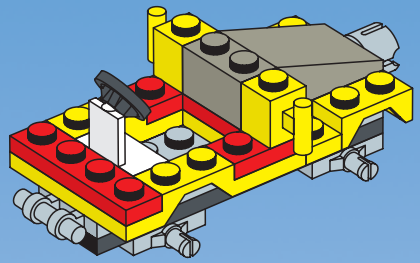

9

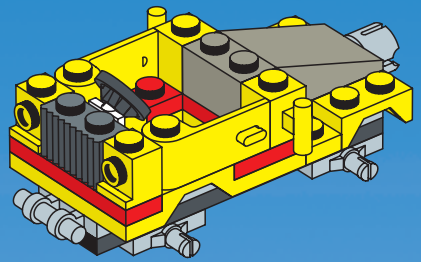

10

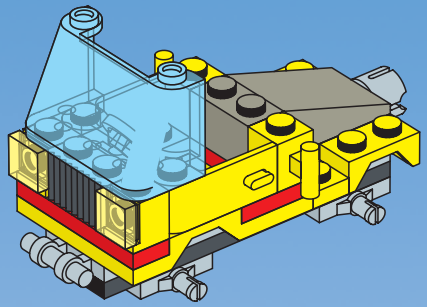

11

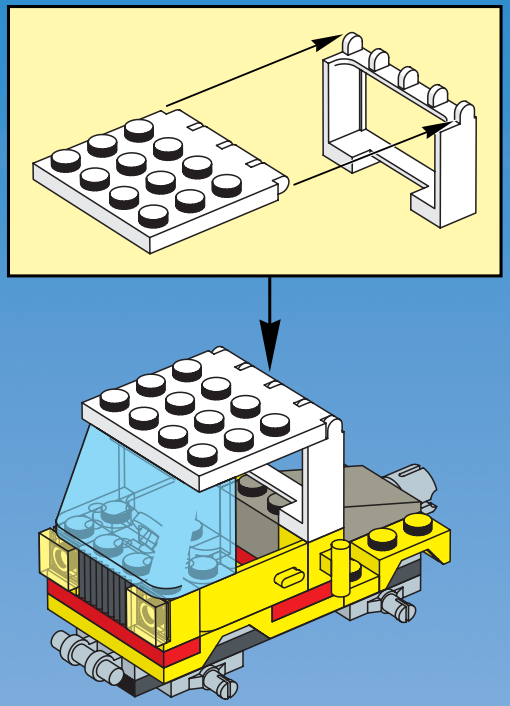

12

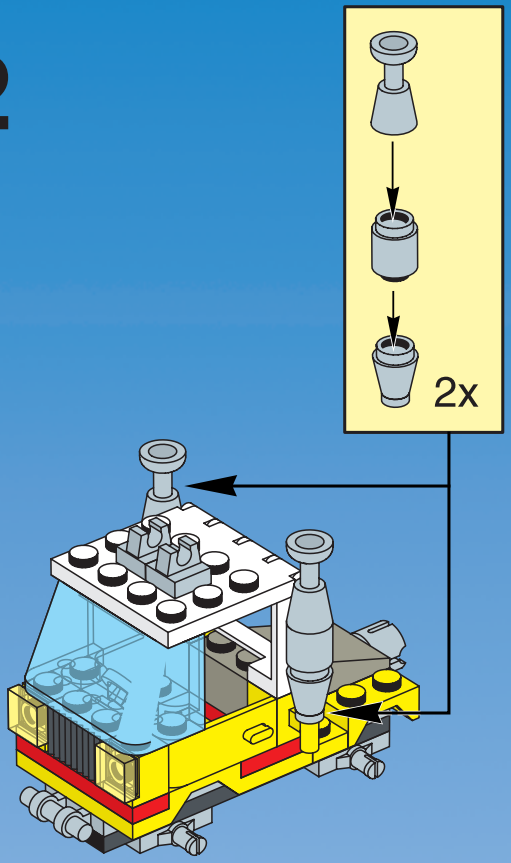

13

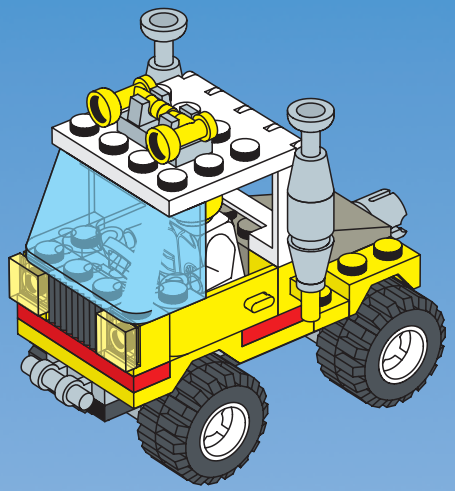

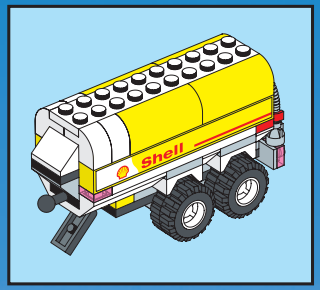

1

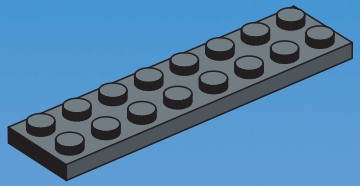

2

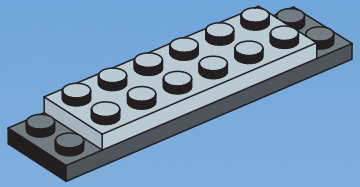

3

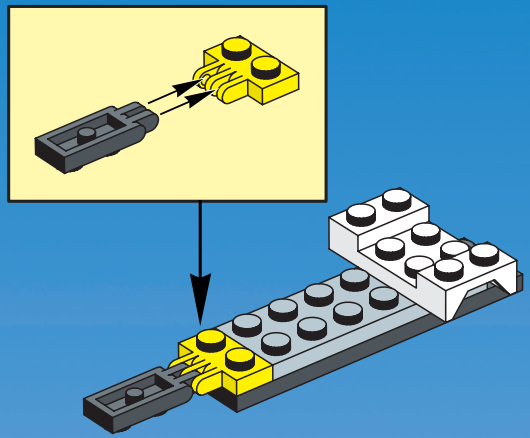

4

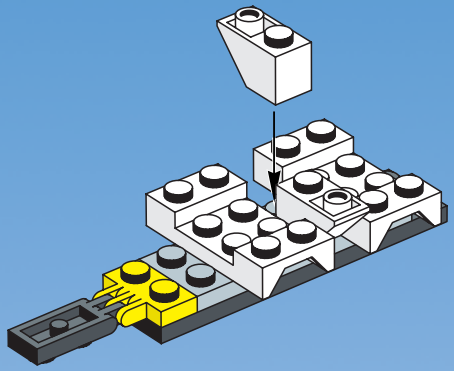

5

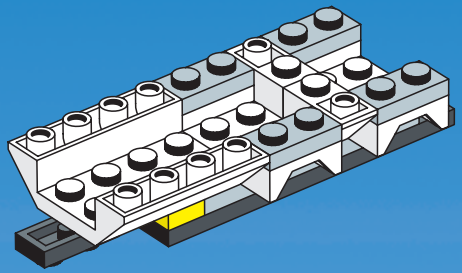

6

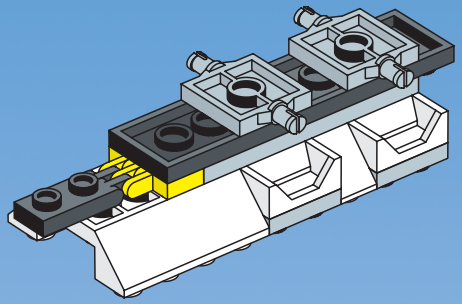

7

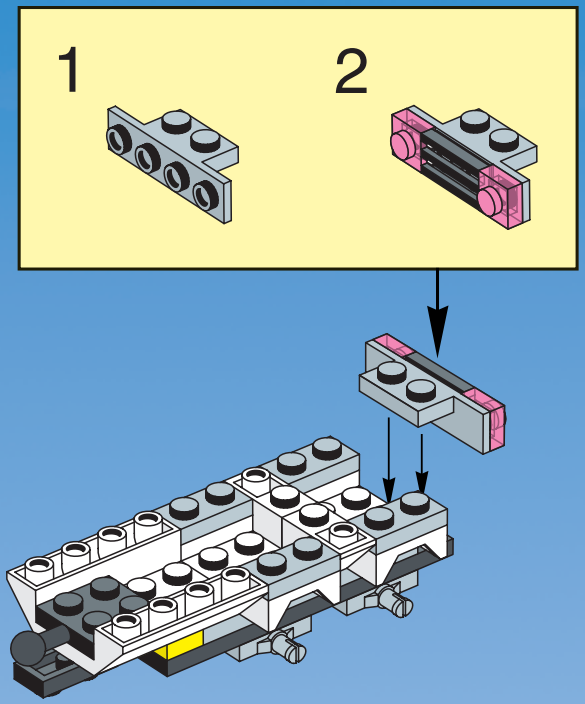

8

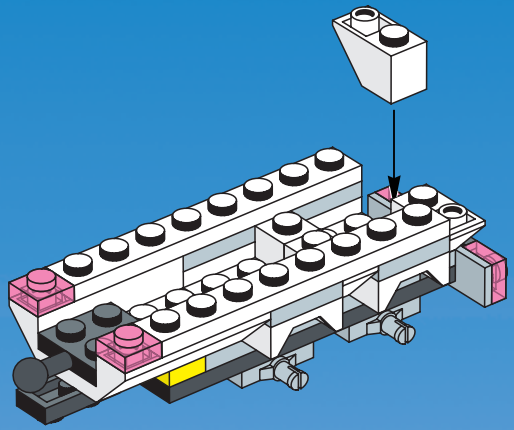

9

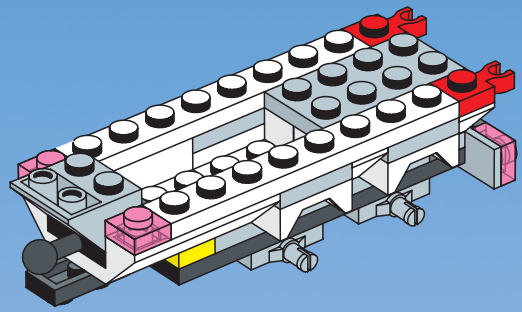

10

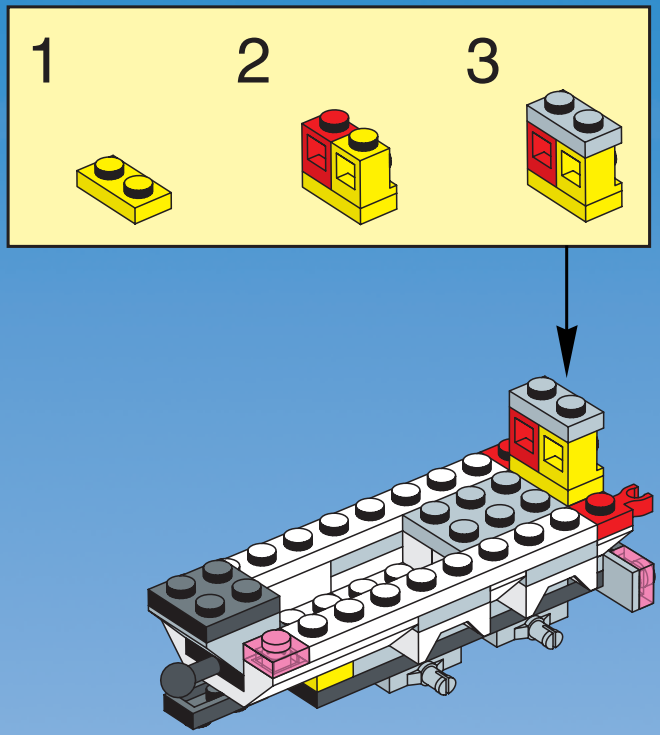

11

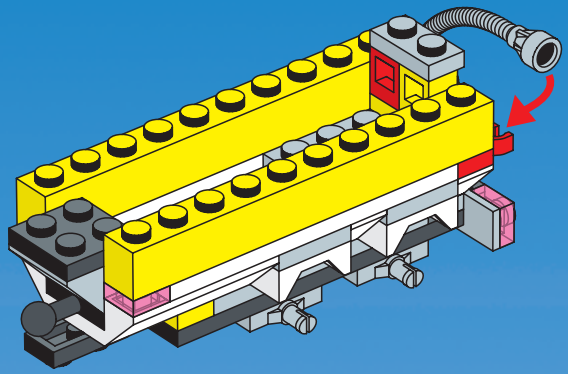

12

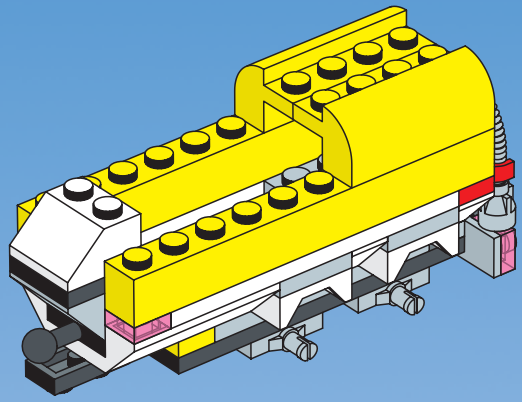

13

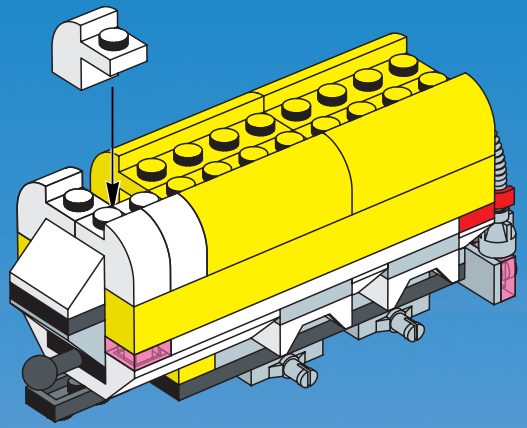

14

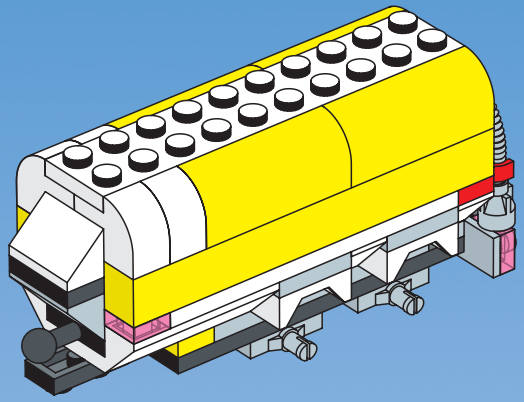

15

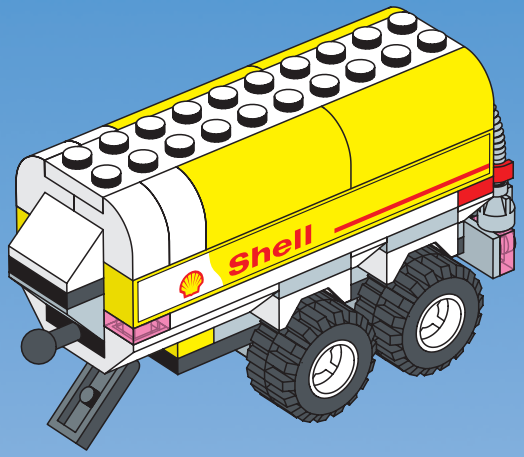


Shell


Shell
www.LEGO.com
© 1999 LEGO Group.